H.C.B-L1029 JAGUAR/LAND ROVER CRANKSHAFT DAMPER REMOVER

* To remove/install the crankshaft pulley.

Rating: Not Rated Yet
Price:

Sales price:

Discount:

Ask a question about this product

Manufacturer: HCB Specialty Tools

Description

Product Description:

HCB JAGUAR/LAND ROVER CRANKSHAFT DAMPER REMOVER

What does it do?

Interchange No.:

H.C.B.-L1029

Country of Origin:
Taiwan
Weight:
0.00 lb
Product Specifications (Features):

* To remove/install the crankshaft pulley.
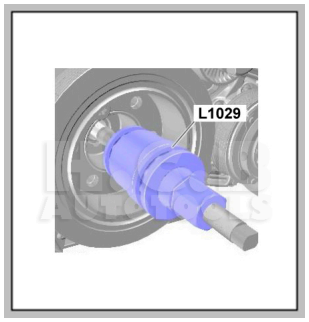
* LAND ROVER USER: LR-LJ - SEE: LAND ROVER: LR90, LR90, LR90SW, LR90