H.C.B-L1015 LAND ROVER/ FORD 2.0/2.4 TDCi TIMING TOOL KIT

* Engine timing tool kit for positioning valve to timing position and also for pump removal.

Rating: Not Rated Yet
Price:

Sales price:

Discount:

Ask a question about this product

Manufacturer: HCB Specialty Tools

Description

Product Description:

NEW LAND ROVER/ FORD 2.0/2.4 TDCi TIMING TOOL KIT

Product info?

Model/Part No. :
H.C.B-L1015

Country of Origin :
Taiwan
Brand :
HCB
Product Specifications Features :

* Engine timing tool kit for positioning valve to timing position and also for pump removal.

* Application:

Ford Focus V (DA SB)

Ford Galaxy IV (WA)

Ford Kuga (CBV)

Ford Focus C-Max (CB3)

Ford Focus II Mar Model (CB4)

Ford Kuga (CBV)

* Engine Codes:

2.0TDCi - FXJA, FXJB, FXJC, FXJD

2.0TDCi - AJBA, AJBB, AJBD, AJBE, AJBF, AJDC, AFMA, AFMC,

AHBA, AHBB, AHJA, AHJB, AHJC, AHJD, AHJE,AHJF,

BFBA, TCJA, TCJB, TDBA, TDBB, TDBC, TDJA, TDJB,

TDJA, TDBB, AHJA

2.0L - AHFA, AHFC, FXJA

2.0TDCi - FMBA,B, TDJA, KUBA,KUJB, KUBA,B, SDBA

2.0TDCi - DBBA, DBBC

2.0TDCi - QJBA

2.0DI - DBFA, DBFA,B, DJEA, FJEA, FJEA
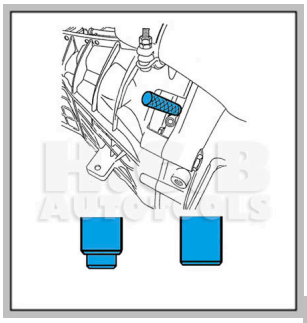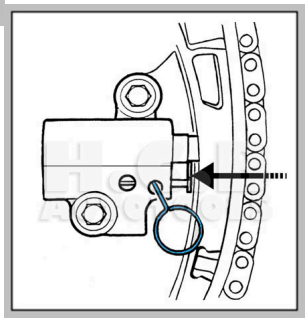
2.0TDCi - AHFA,B,AHJA, JAGA,C,FHFA,G