H.C.B-A1951 VW/AUDI PTFE CRANKSHAFT REAR SEAL INSTALLER

* Used when assembling PTFE crankshaft seal, flywheel end.

Rating: Not Rated Yet
Price:

Sales price:

Discount:

Ask a question about this product

Manufacturer: HCB Specialty Tools

Description

Product Description:

H.C.B.-A1951

VW REPAIR TOOLS : H.C.B-A1951 VW/AUDI PTFE CRANKSHAFT REAR SEAL INSTALLER

What does it do?

Interchange No.:

H.C.B.-A1951

Country of Origin:
Taiwan
Brand:
H.C.B.
Product Specifications (Features):

* Used when assembling PTFE crankshaft seal, flywheel end.

* Used for proper installation of rear main seal

* For vehicles with TSI engines only.

* VW OEM no.s:

TSI/AWD 1 guide piece

TSI/AWD 2 guide piece

TSI/AWD 1 thrust piece

TSI/AWD 2 thrust piece

TSI/AWD 3 thrust piece

TSI/AWD 1 crank shaft seal installer - guide piece

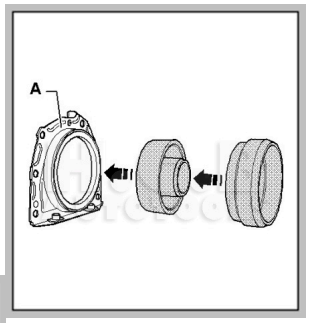
A

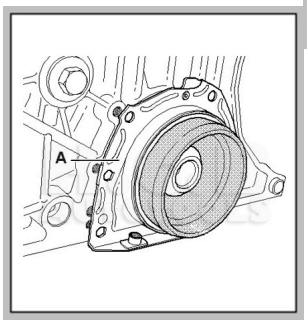
A