H.C.B-A1951 VW/AUDI PTFE CRANKSHAFT REAR SEAL INSTALLER

*Used when assembling PTFE crankshaft seal, flywheel end.

Rating: Not Rated Yet
Price:

Sales price:

Discount:

Ask a question about this product

Manufacturer: HCB Specialty Tools

Description

Product Description:

VW

VW/AUDI PTFE CRANKSHAFT REAR SEAL INSTALLER

Product info

detailed info :

H.C.B.-A1951

Country of Origin:
Taiwan
Weight:
0.0 lb
Product Specifications Features:

*Used when assembling PTFE crankshaft seal, flywheel end.

*Used for proper installation of rear main seal

*For vehicles with TR4 engines only

*VW AIRCRAFT

TIGHEN 1 guide plate

TIGHEN 2 guide plate

TIGHEN 3 circular plate

TIGHEN 4 circular plate

TIGHEN 5 circular plate

TIGHEN the 1 main shaft seal installer - guide plate

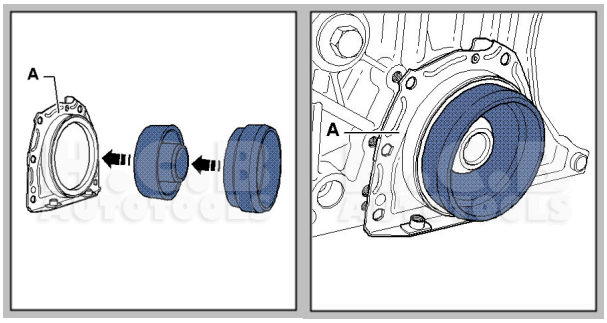
A
A