H.C.B-D1506 VAG 1.8/2.0 TSI/TFSI (EA888) ENGINE TIMING TOOL KIT

* Used for correcting the camshaft and crankshaft timing position. * Four-cylinder EA888 petrol engine: 1.8 R4 16v TSI/TFSI, 2.0 R4 16v TSI/TFSI * Application: 2006~2013 VAG series TSI, TFSI EA888 engine (1.8L, 2.0L). * Engine Code: BYT, BZB, CABA, CAB

Rating: Not Rated Yet
Price:

Sales price:

Discount:

Ask a question about this product

Manufacturer: HCB Specialty Tools

Description

Product Description:

VW REPAIR TOOLS : H.C.B-D1506 VAG 1.8/2.0 TSI/TFSI (EA888) ENGINE TIMING TOOL KIT

Wholesaler only?

Wholesaler Info:

H.C.B-D1506

Number of Origin:
Normal
H.C.B-D1506
H.C.B-D1506
Product Specifications (Features):

* Used for correcting the camshaft and crankshaft timing position.

* Four-cylinder EA888 petrol engine: 1.8 R4 16v TSI/TFSI, 2.0 R4 16v TSI/TFSI

* Application: 2006~2013 VAG series TSI, TFSI EA888 engine (1.8L, 2.0L).

* Engine Code: BYT, BZB, CABA, CAB, CABB, CABD, CABA, CABB, CABB, CABD
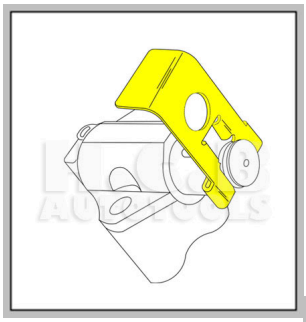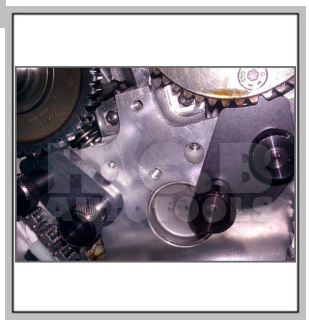
* VW GOLF ex. ver.: TS-EOS, TS-GOLF, TS-GTI, TS-GTI 5, TS-GTI, TS-GOLF, TS-GOLF 5, TS-GOLF 6, TS-GOLF 7, TS-GOLF 7 Variant