H.C.B-IV1007 IVECO CRANKSHAFT REAR OIL SEAL INSTALLATION TOOL

* Crankshaft rear seal installer

Rating: Not Rated Yet
Price:

Sales price:

Discount:

Ask a question about this product

Manufacturer: HCB Specialty Tools

Description

Product Description:

NEW IVECO CRANKSHAFT REAR OIL SEAL INSTALLATION TOOL

Product info

Model/Part No.:

H.C.B.-IV1007

Country of origin:

Taiwan

Material:

Steel

Product Specifications (Features):

* Crankshaft rear seal installer

* Application: IVECO F3G ENGINES F3G/SILLIFT CURSOR(EURO 5)

* Details: Solid, 7

* OEM NO: 5801.14.140 5801800.
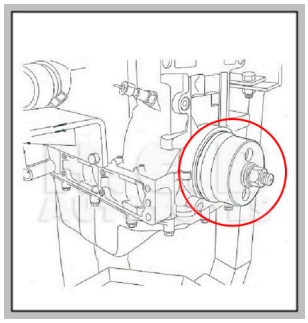
* CODE NO.: 5801800.